Technical data sheet

Cone cable gland, PG thread, cutting ring, nickel-plated

Item number: 2082500

Cable gland with hexagonal intermediate connector, shape C4, to DIN 46320 with Pg connection thread to DIN 40430.

Pressure rings made of electrogalvanised and transparently passivated steel.

NR/SBR sealing ring.

Protection rating: with connection thread sealing ring IP 65, without connection thread sealing ring IP 54.

With cutting ring.

* Prices according to DEL notation.

CE UK CA IP 54 IP 65 Pg

CuZn 37 Brass

N Nickel-plated

Master data

Item number	2082500
Type	162 MS PG11
Description 1	Cable gland
Description 2	with cutting ring
Manufacturer	OBO
Dimension	PG11
Material	Brass
Surface Surface standard	Nickel-plated
Smallest sales unit	50
Unit of quantity	Piece
Weight	1.96 kg
Weight unit	kg/100 pc.
CO2 Footprint (GWP) Cradle-to-Gate	0,0742 kg CO2e / 1 Piece

Technical data sheet

Cone cable gland, PG thread, cutting ring, nickel-plated

Item number: 2082500

Dimensions

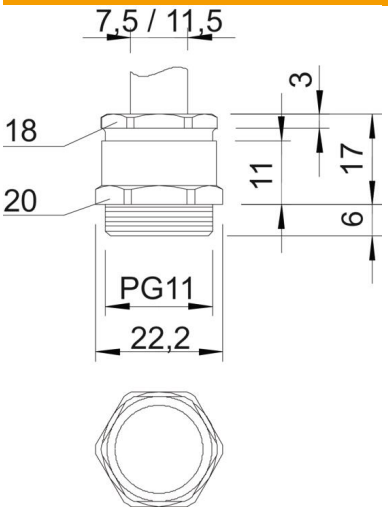

Dimension E	22.2 mm
Dimension L	17 mm
Dimension L max.	17 mm
Dimension L1	6 mm
Dimension L2	11 mm
Dimension L3	3 mm

Technical data

Type of seal	Cuttable sealing ring
Bend protection	no
Sealing area D, max.	11.5 mm
Sealing area D, min.	7.5 mm
explosion-proof	no
Flat cable gland	no
For Ex zone	Without
Thread	Pg 11
Thread type	PG
Thread length	6 mm
Fibre-glass reinforced	no
Halogen-free	no
Sealing insert, multiple	no
With locknut	no
ROHS-conformant	Exempt
Impact-resistant	no
WAF 1	20 mm
WAF 2	18 mm
Protection rating	IP65
Strain relief option	no