Technical data sheet

Cone cable gland, PG thread, small cutting ring, nickel-plated

Item number: 2082071

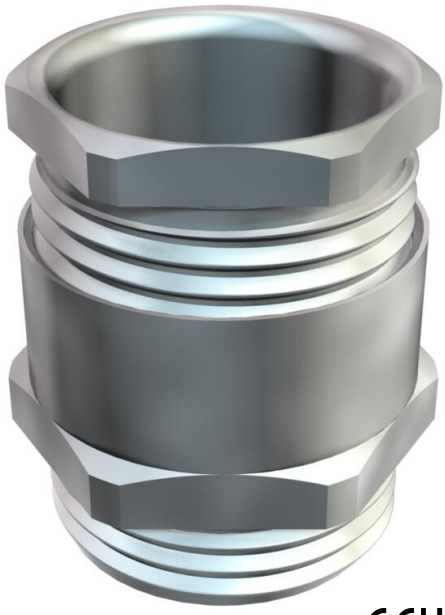

Cable gland with hexagonal intermediate connector, shape C4, to DIN 46320 with Pg connection thread to DIN 40430.

Pressure rings made of electrogalvanised and transparently passivated steel.

NR/SBR sealing ring.

Protection rating: with connection thread sealing ring IP 65, without connection thread sealing ring IP 54.

With simple sealing ring, with small internal diameter.

* Prices according to DEL notation.

CE UKCA IP 54 IP 65 Pg

CuZn 37 Brass

N Nickel-plated

Master data

Item number	2082071
Type	163 MS PG 7
Description 1	Cable gland
Manufacturer	OBO
Dimension	PG7
Material	Brass
Surface	Nickel-plated
Surface standard	
Smallest sales unit	50
Unit of quantity	Piece
Weight	0.85 kg
Weight unit	kg/100 pc.
CO2 Footprint (GWP) Cradle-to-Gate	0,0303 kg CO2e / 1 Piece

Technical data sheet

Cone cable gland, PG thread, small cutting ring, nickel-plated

Item number: 2082071

Dimensions

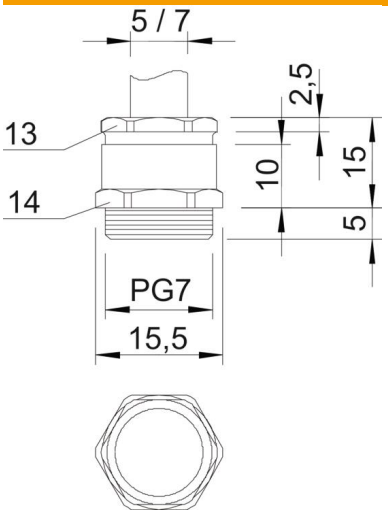

Dimension E	15.5 mm
Dimension L	15 mm
Dimension L max.	15 mm
Dimension L1	5 mm
Dimension L2	10 mm
Dimension L3	2.5 mm

Technical data

Type of seal	Sealing ring
Bend protection	no
Sealing area D, max.	7 mm
Sealing area D, min.	5 mm
explosion-proof	no
Flat cable gland	no
For Ex zone	Without
Thread	Pg 7
Thread type	PG
Thread length	5 mm
Fibre-glass reinforced	no
Halogen-free	no
Sealing insert, multiple	no
With locknut	no
ROHS-conformant	Exempt
Impact-resistant	no
WAF 1	14 mm
WAF 2	13 mm
Protection rating	IP54
Strain relief option	no